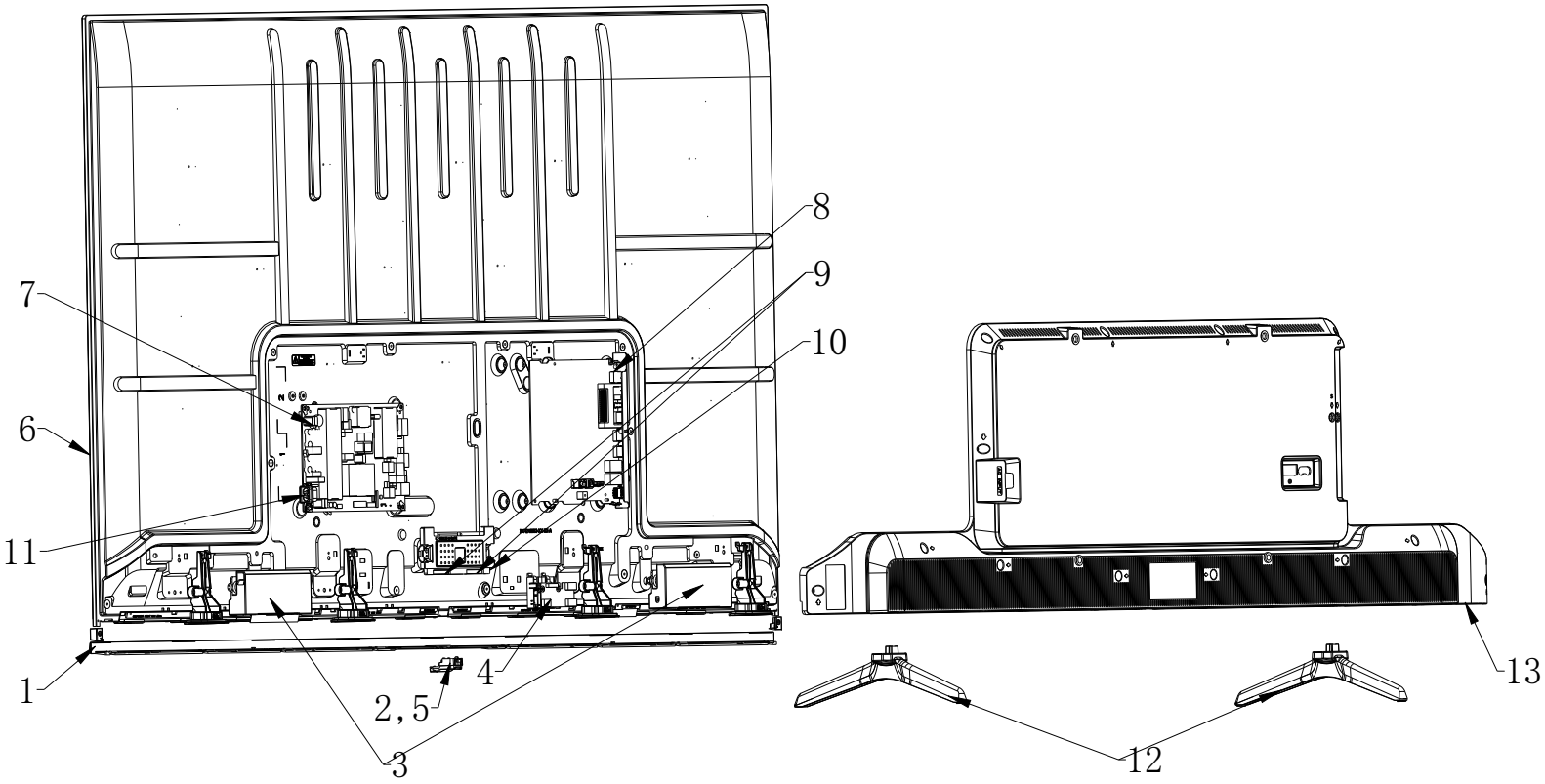Serial Model Number	65A56FEVS