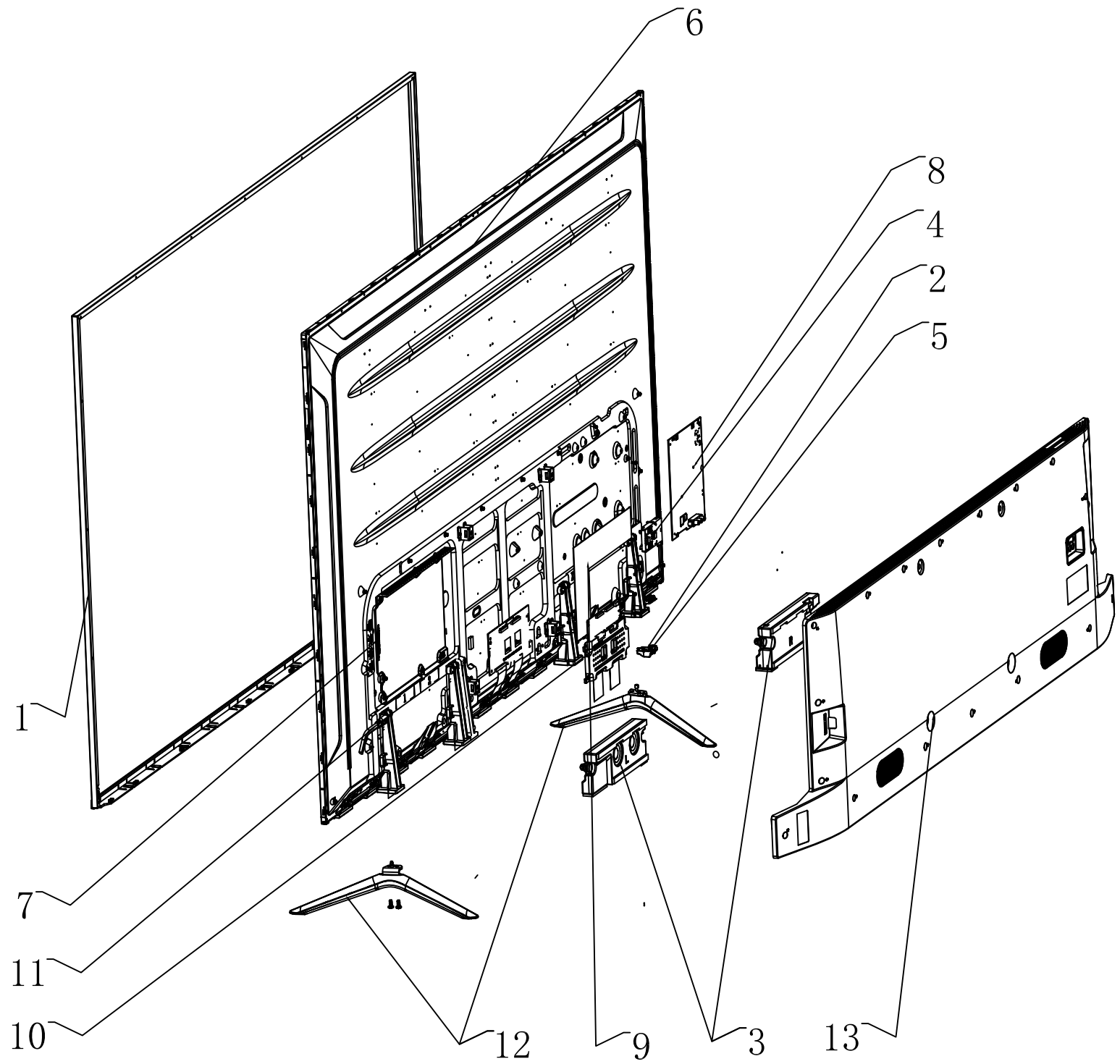Serial Model Number	75A6170