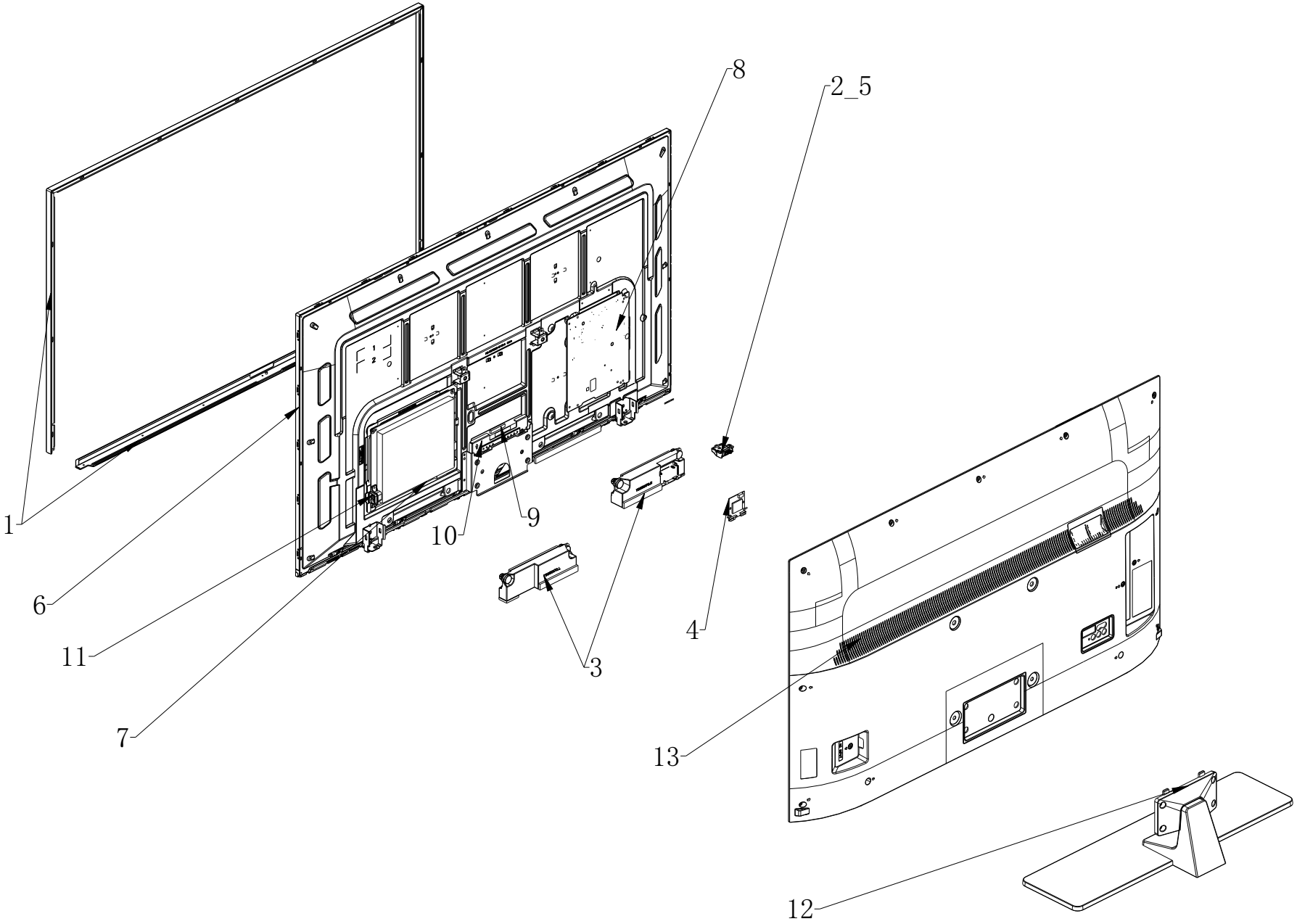| Serial Model Number | 43A6502 |
| --- | --- |