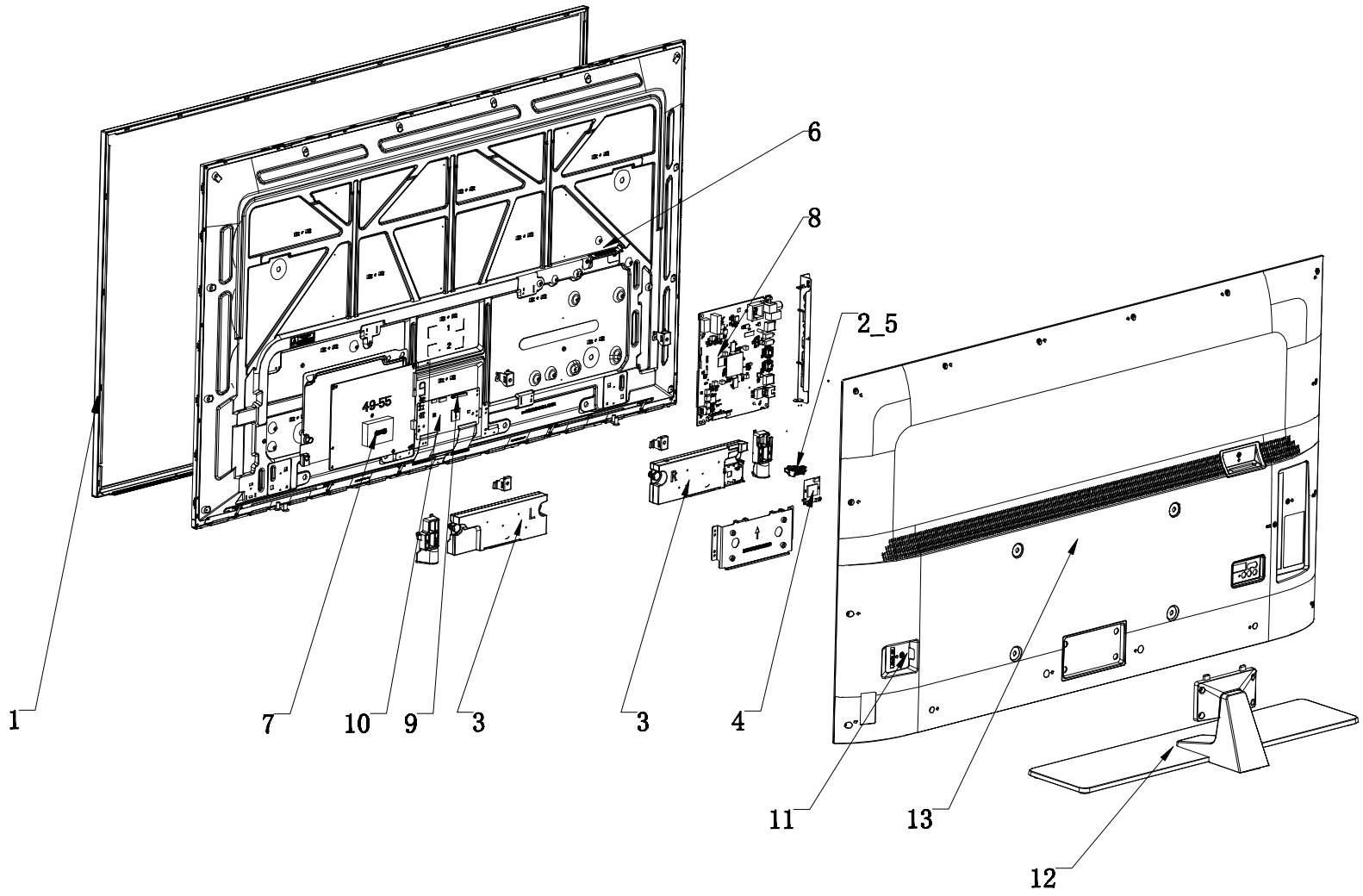Serial Model Number	55A6502