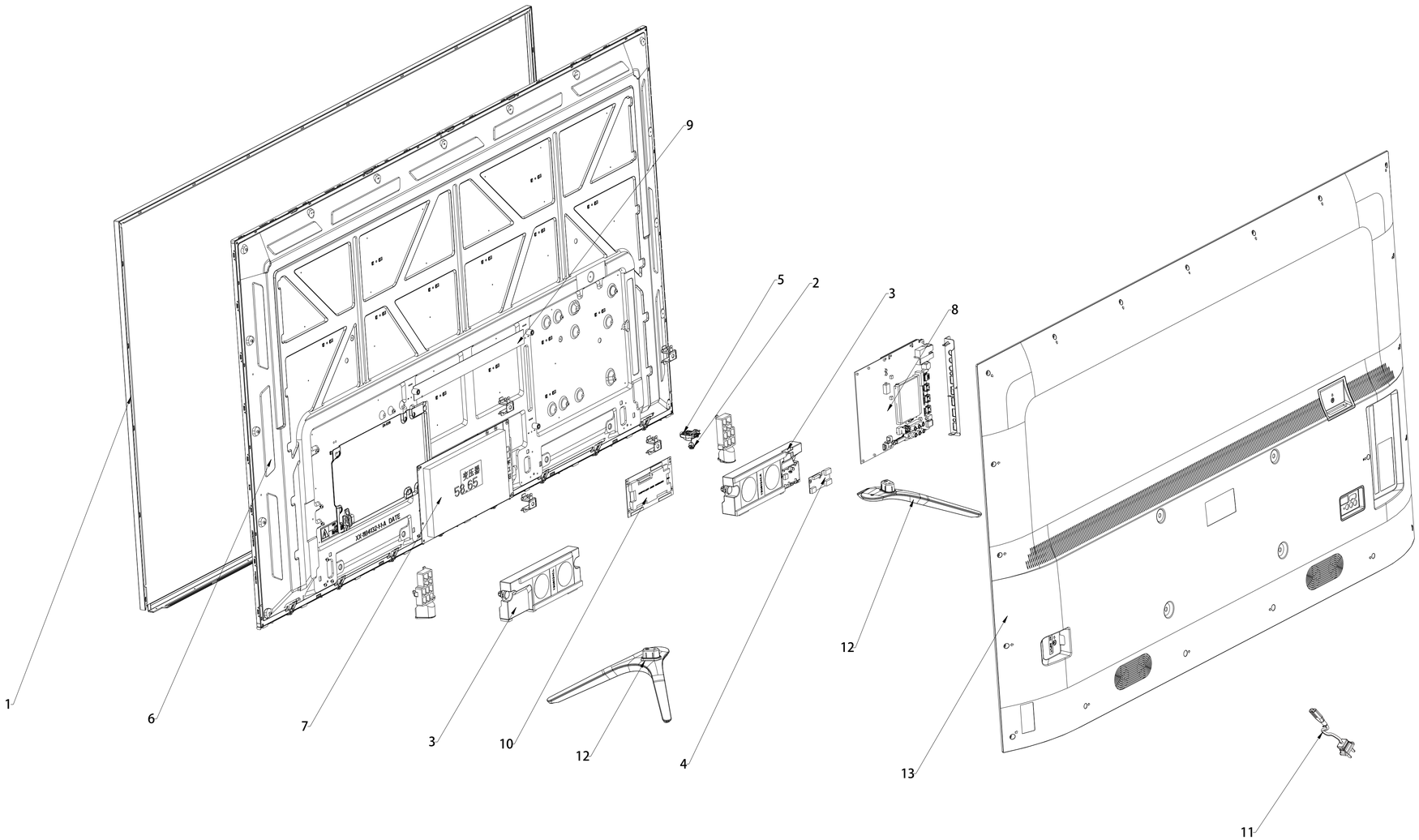Serial Model Number	HU65A6500UW